T-FLEX CAM

Computer Aided Machining (CAM) software for programming CNC machines

TOP SYSTEMS

About T-FLEX CAM

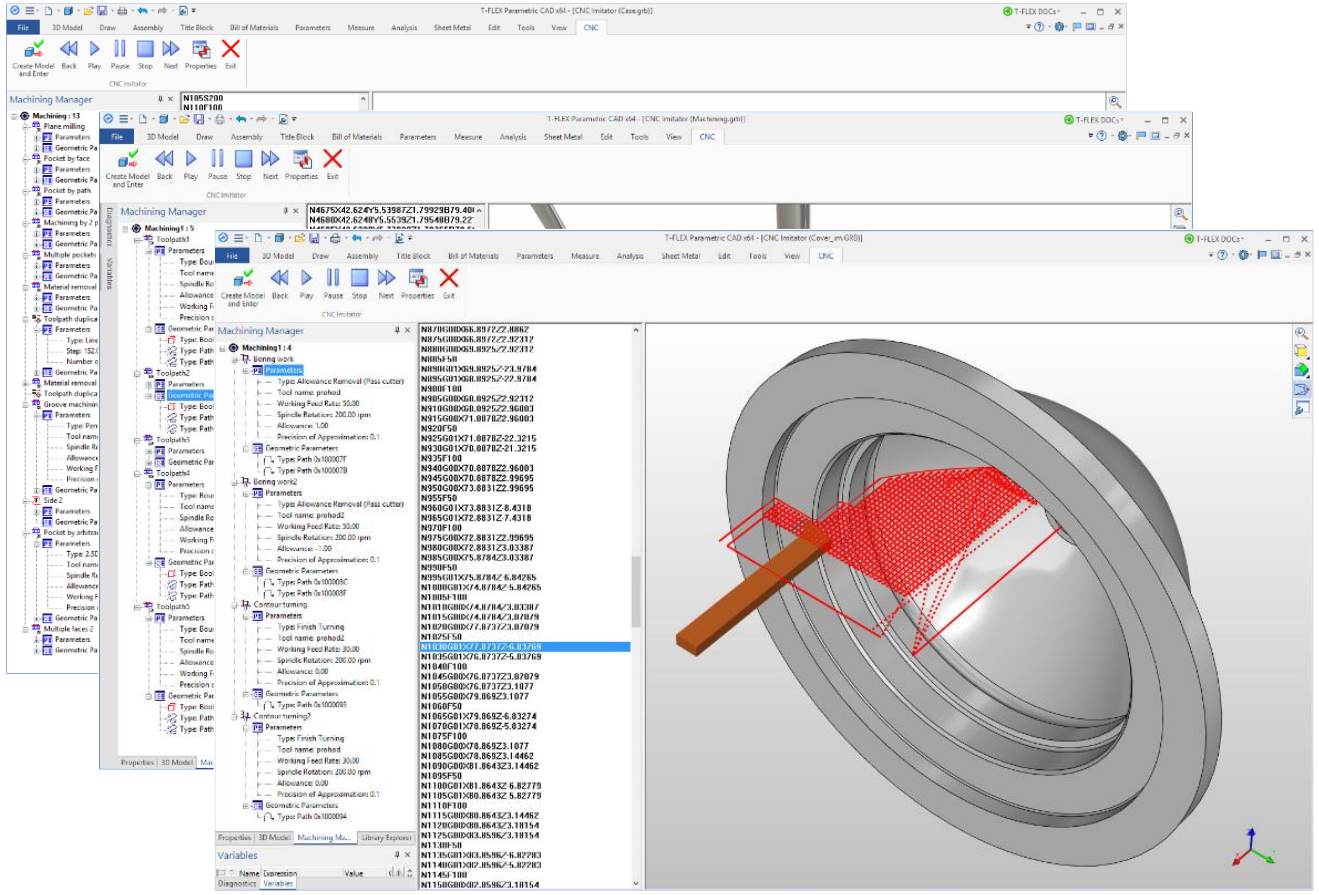

T-FLEX CAM supports a complete range of major manufacturing applications from wire EDM and turning to 5 axis milling and combined turning-milling.

T-FLEX CAM Workflow

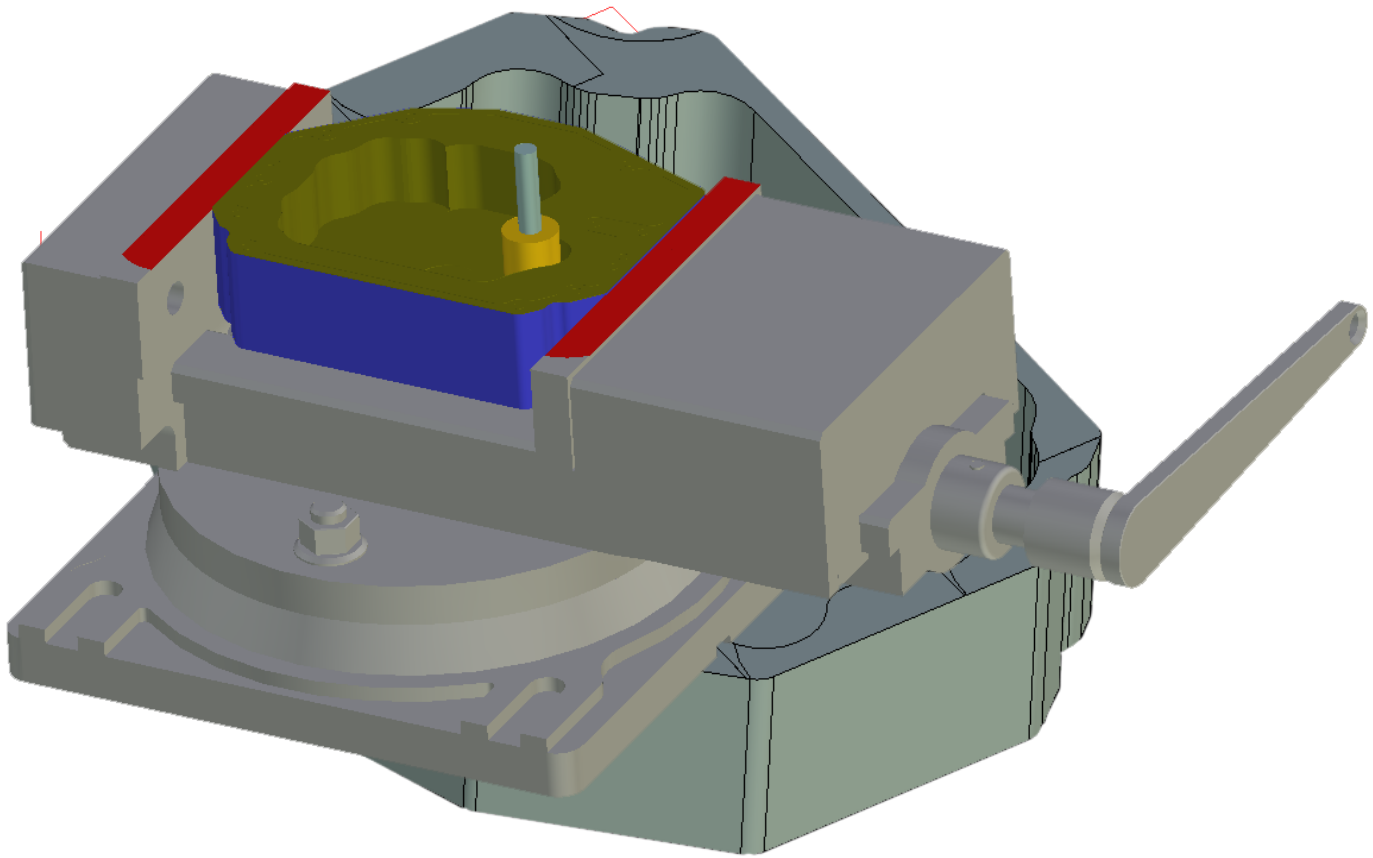

- ✓ Part design
- ✓ Workpiece modeling
- ✓ NC program generation and toolpath construction
- ✓ Machining simulation
- ✓ Result verification and evaluation for each operation

T·FLEX CAM

T-FLEX CAM Workflow

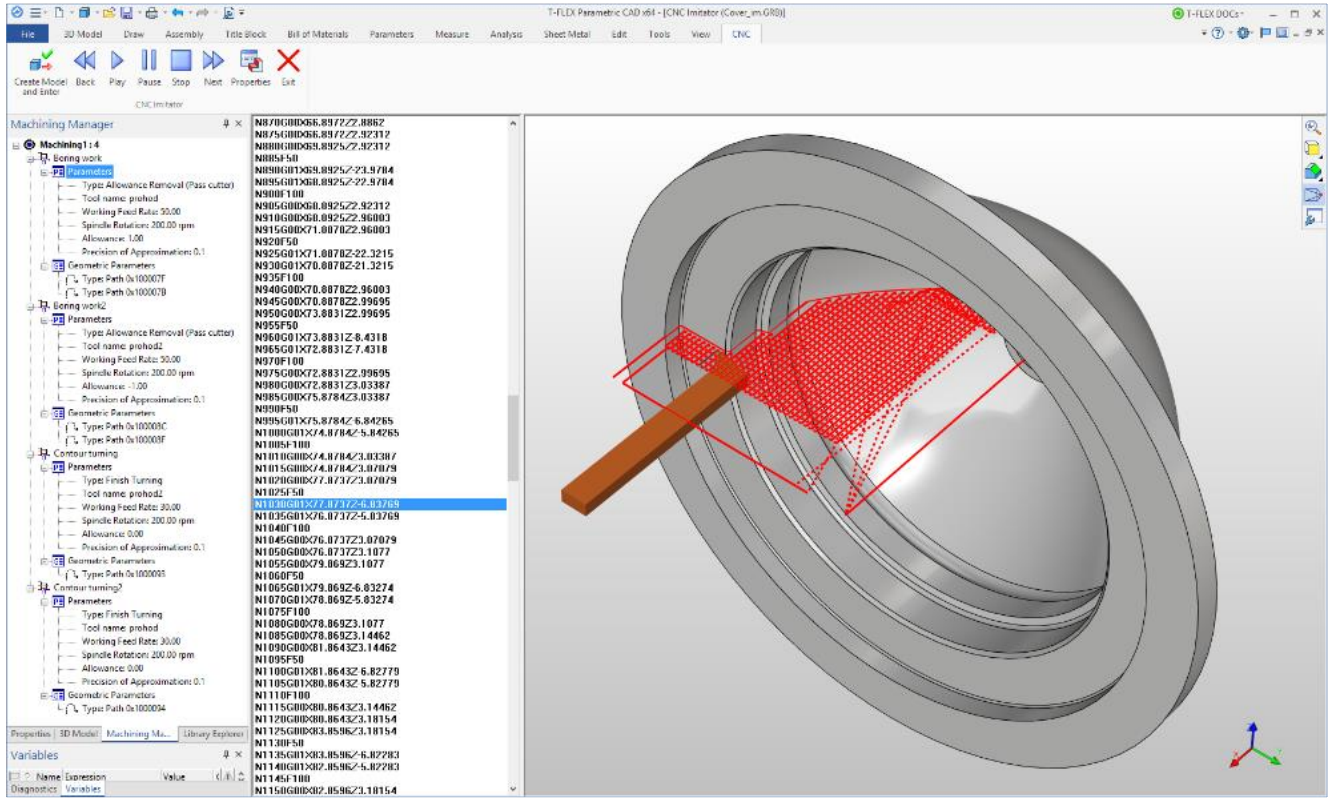

- The usage of M is an analog of T-FLEX CAM
- T-FLEX CAM is an add-on to T-FLEX CAD
- Such integration provides: allows you to simplify the design model and to create geometry of workpieces and fixtures.
- The usage of M is an analog of T-FLEX CAD modeling tools for additional constructions.

Machining Processes

Wire EDM (2D and 4D)

Supports two independent contours on the same part.

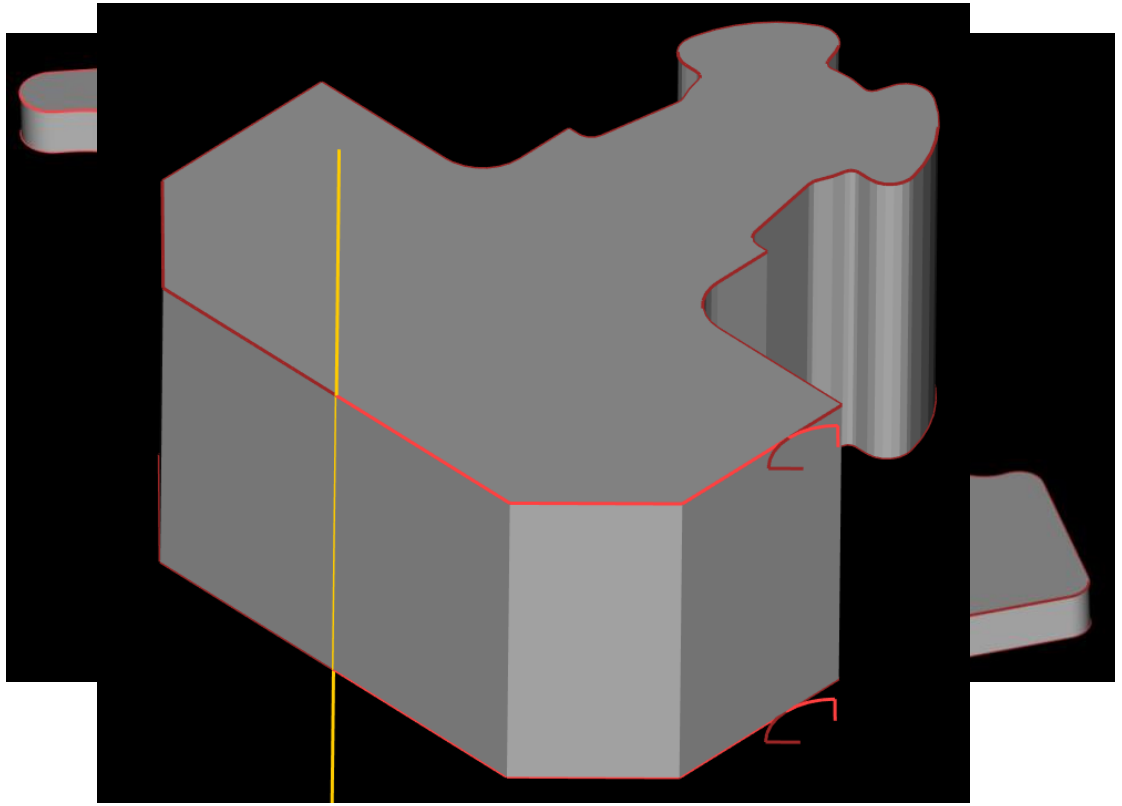

T-FLEX CAM

Machining Processes

2.5D milling and drilling

Provides output for milling operations and hole machining on the basis of only 2D geometry.

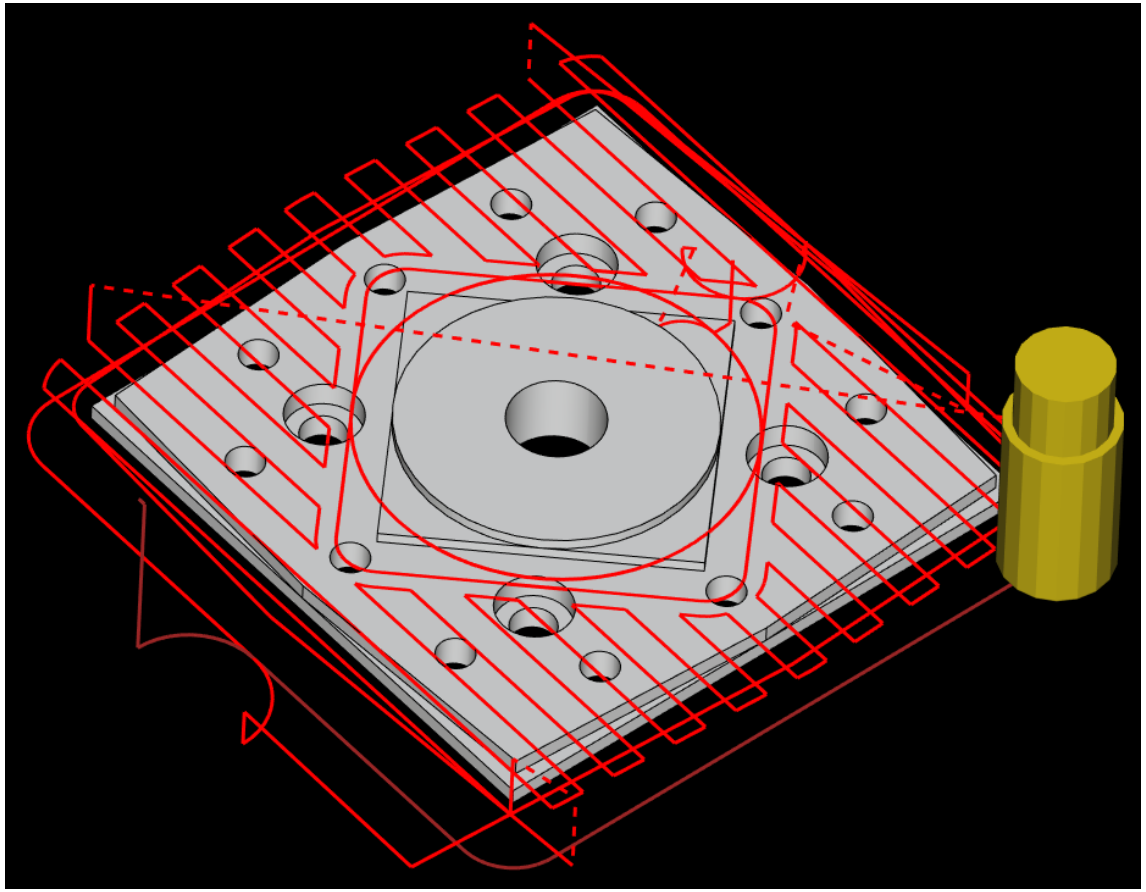

T-FLEX CAM

Machining Processes

Turning and axial drilling

- ✓ Machining the outer and inner surfaces of the bodies of revolution with an immovable tool.
- ✓ Axial drilling.
- ✓ Cut away operations.
- ✓ Thread cutting and tapping.
- ✓ Diametrical and face grooving.
- ✓ Others…

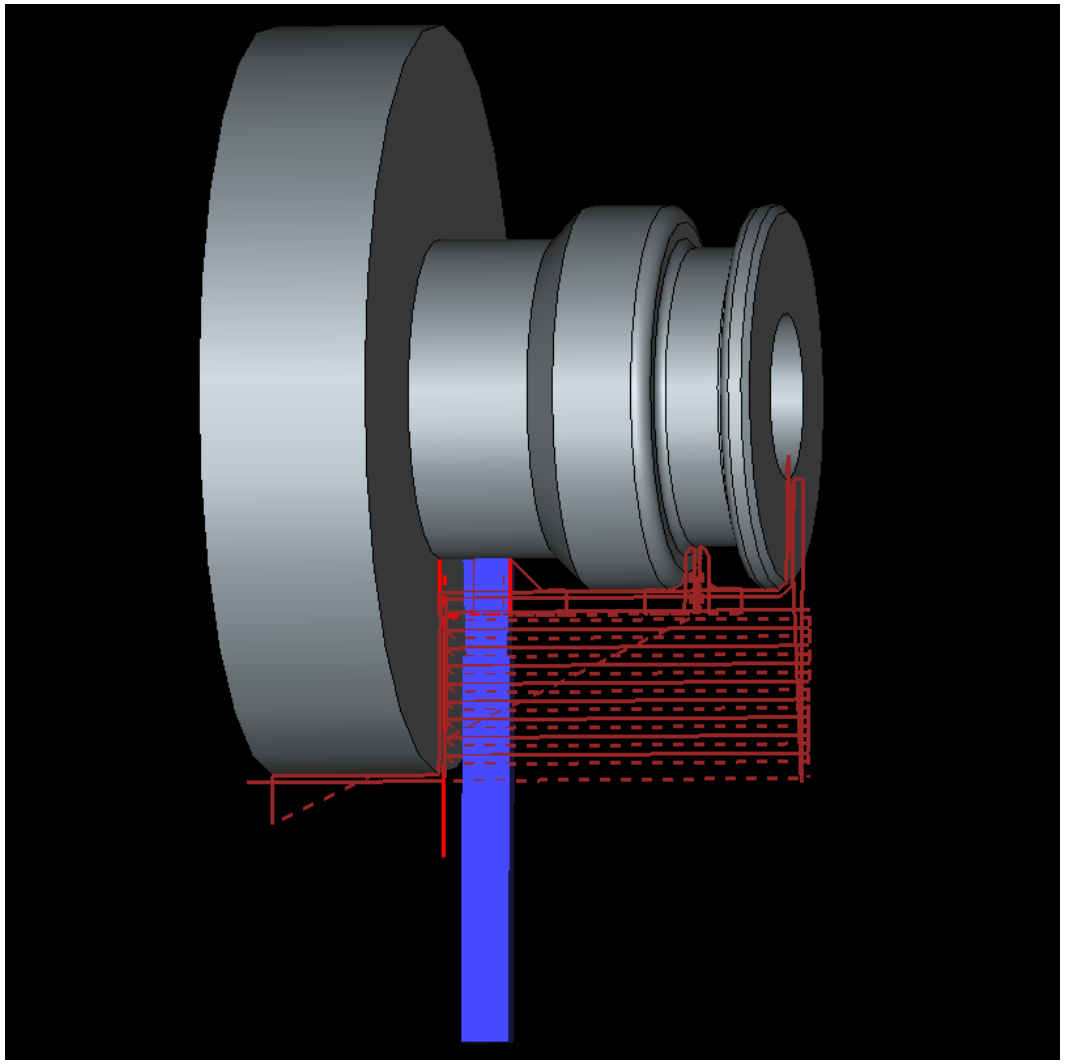

T-FLEX CAM

Machining Processes

Wire EDM (2D and 4D)

Supports two independent contours on the same part.

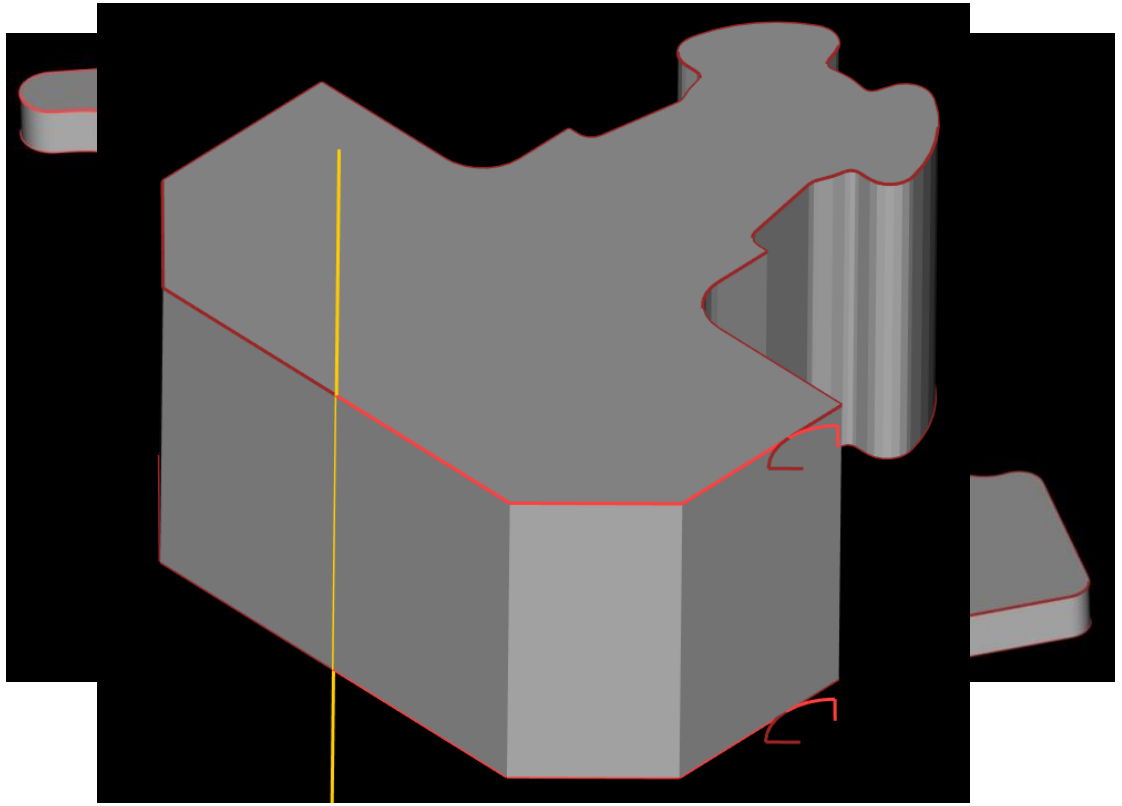

T-FLEX CAM

Machining Processes

Punching

Punching types:

- ✓ continuous - consecutive strikes of stamp;
- ✓ checkerboard pattern - through one forward and backward.
- ✓ Possibility to set margins, loops and bridges.
- ✓ Use of the shaped stamp.

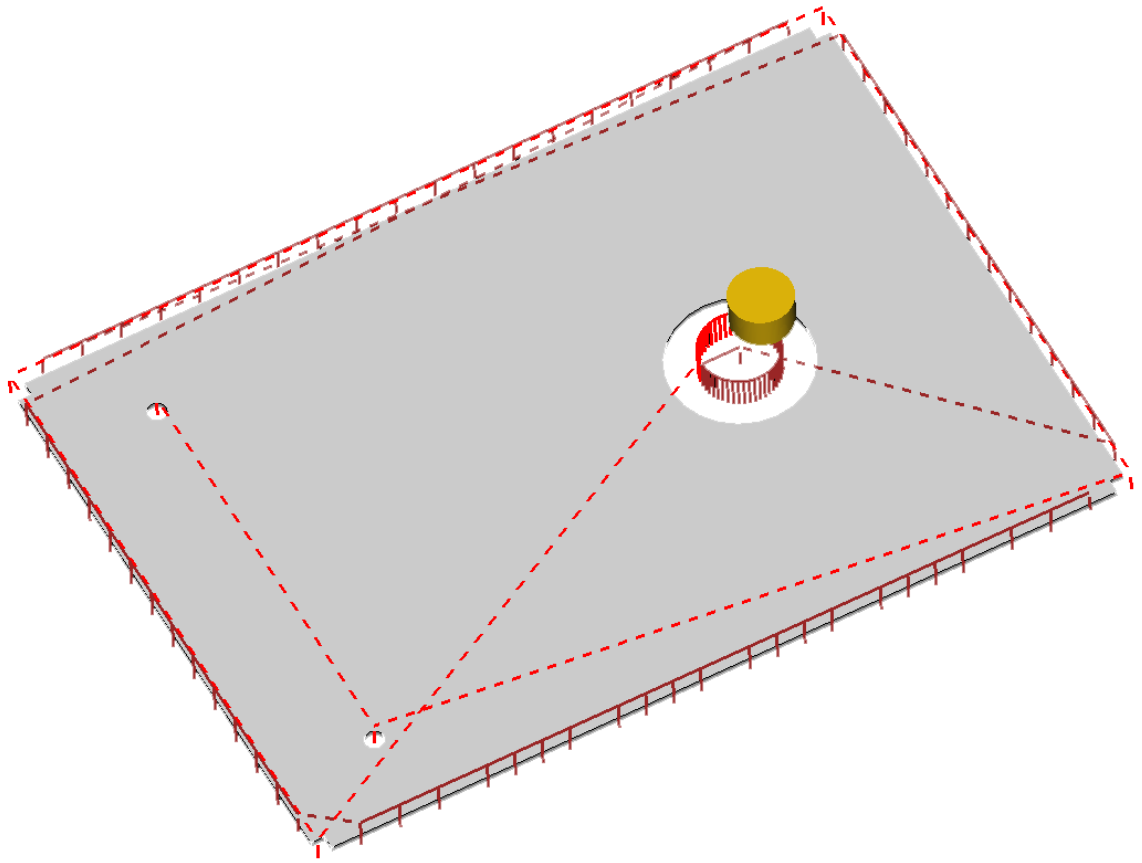

T-FLEX CAM

Machining Processes

2.5D milling and drilling from 3D models

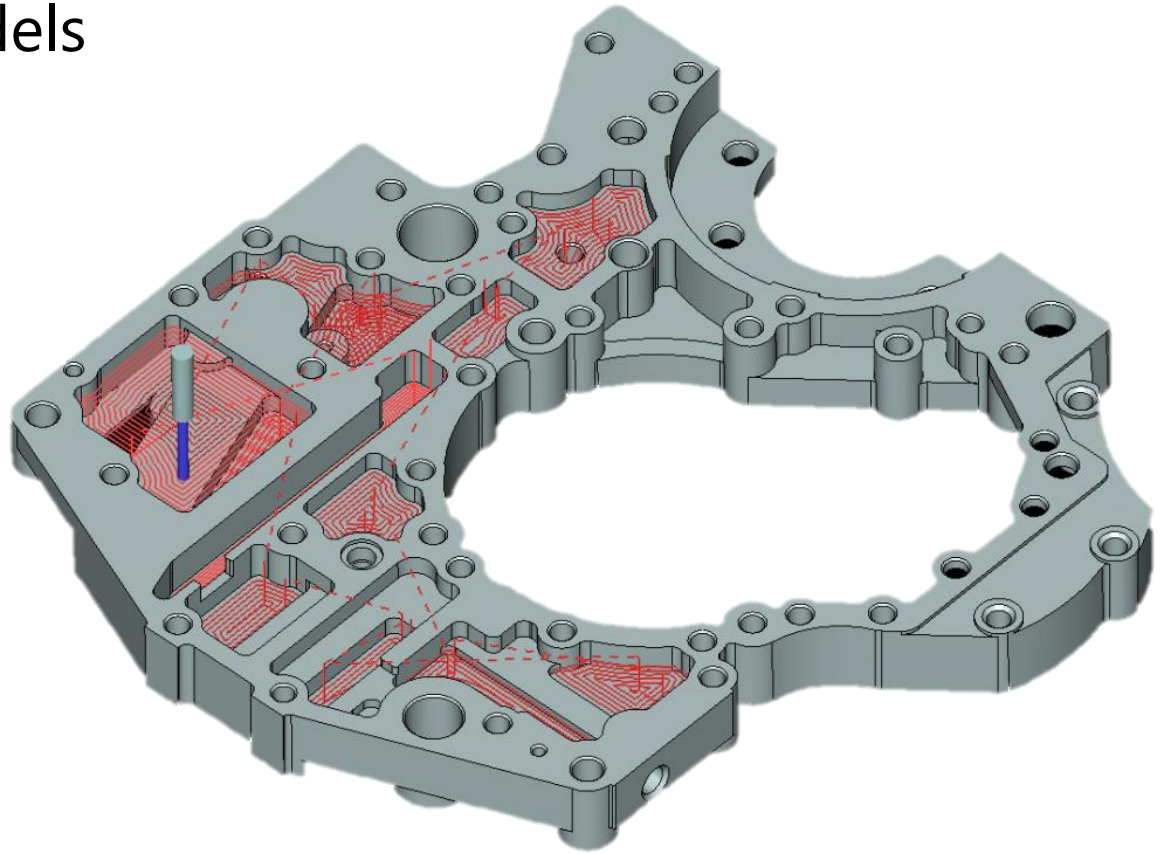

Simple and easy creation of toolpaths for milling slots, pockets and reduction of arbitrary shapes.

T-FLEX CAM

Machining Processes

2.5D milling and drilling from 3D models

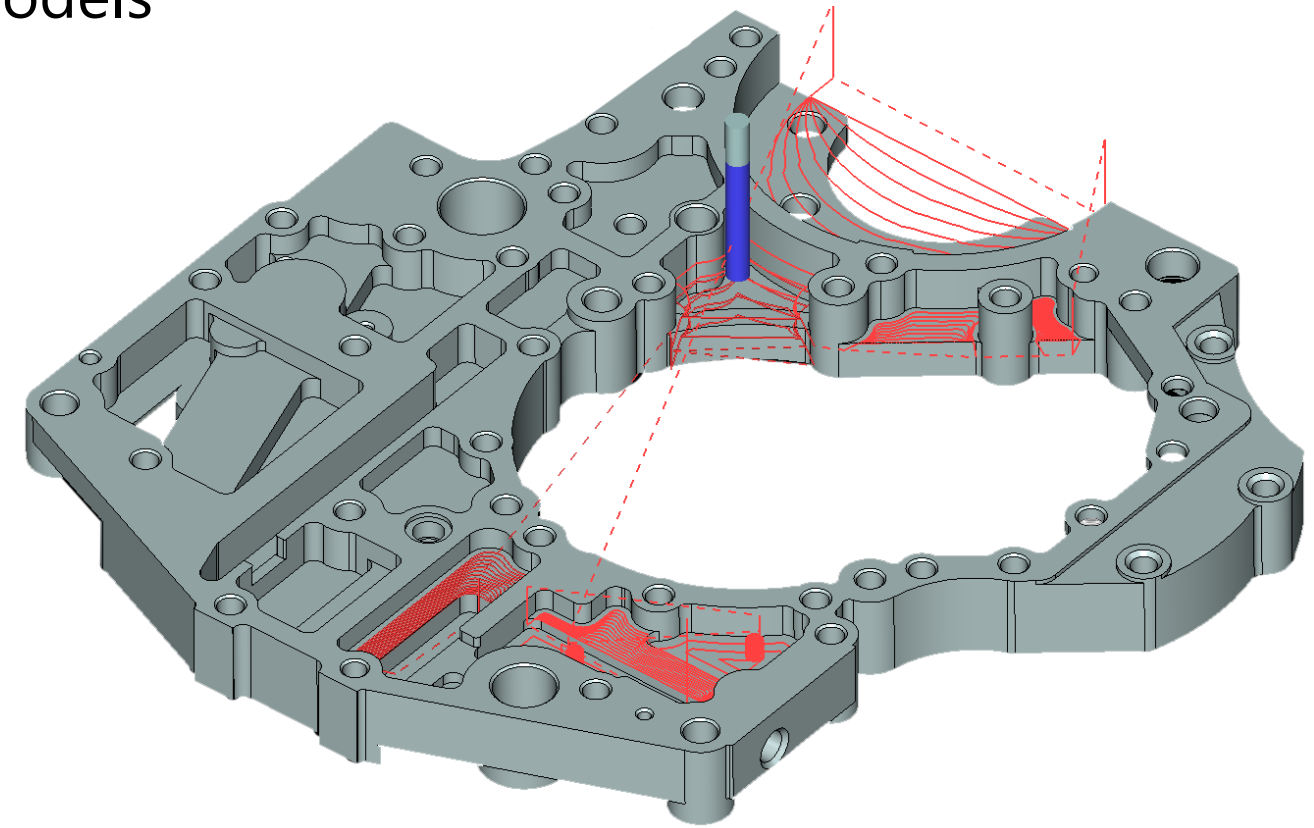

Generating toolpaths for various open pockets: “blind”, “through”, and with enclosures.

T-FLEX CAM

Machining Processes

2.5D milling and drilling from 3D models

System automatically detects all holes after indicating the surface for machining.

The machining sequence is determined automatically, based on the minimum displacement.

There is automatic detection of holes' depth.

Drilling, boring, tapping with comb and mill.

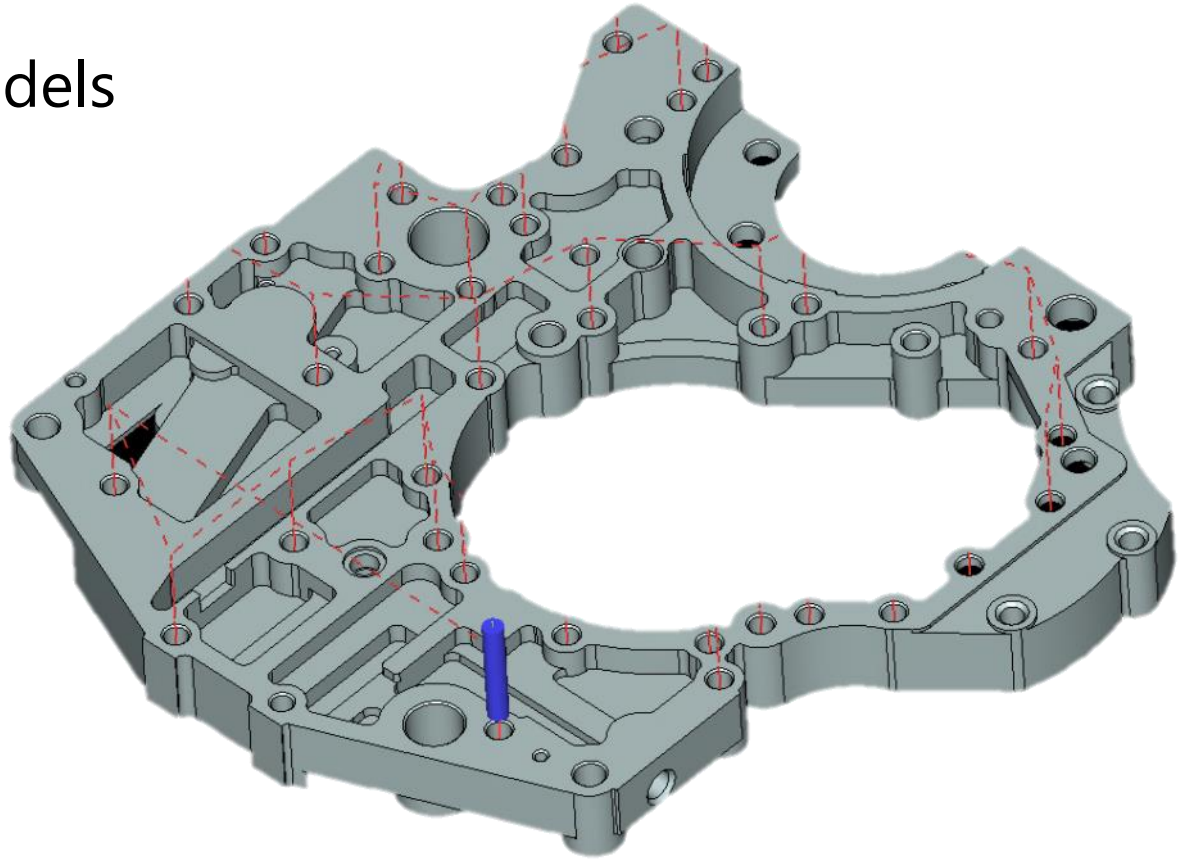

T-FLEX CAM

Machining Processes

Plunge milling

In thin-walled parts with large in depth material removal, walls can be deformed due to radial forces when cutting.
In this case, plunge roughing milling can be applied with mainly axial machining load.

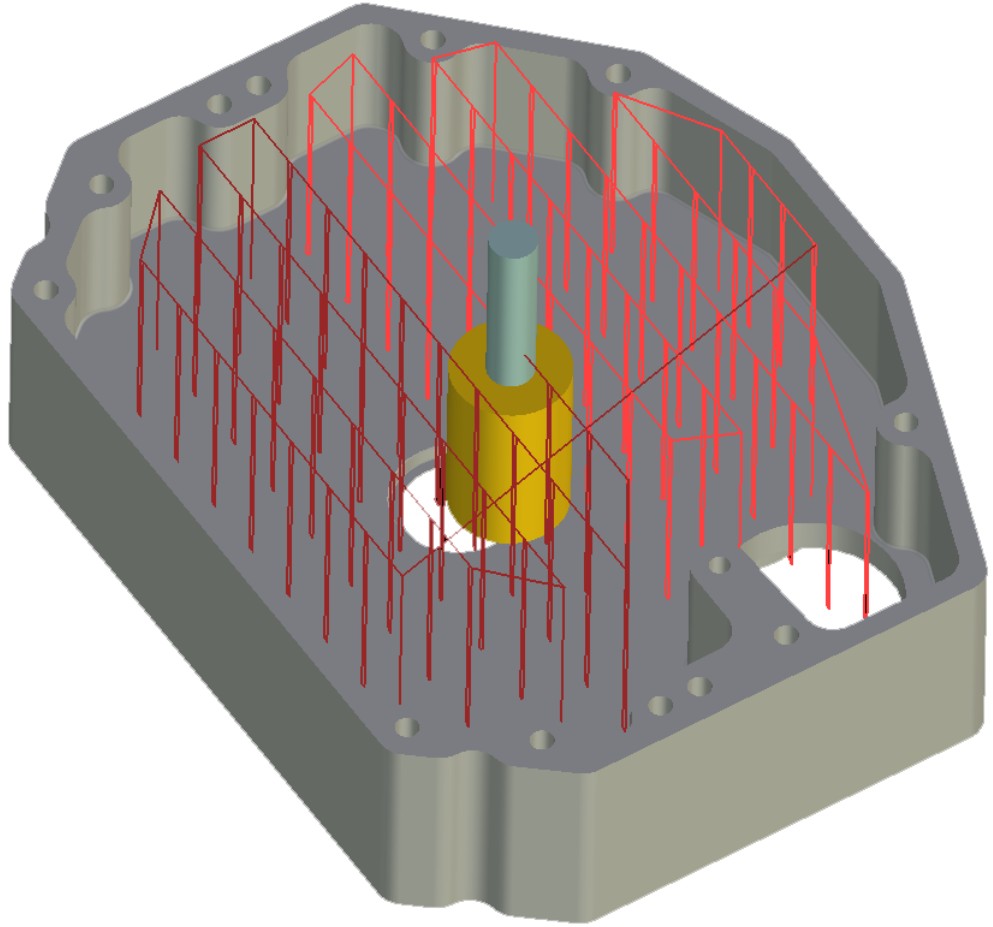

T-FLEX CAM

Machining Processes

3D + 2D milling

(5D discrete)

Analogous to the 2.5D machining, system supports 5D machining with tool positioning.

In this case, the tool automatically turns perpendicular to the treated surface.

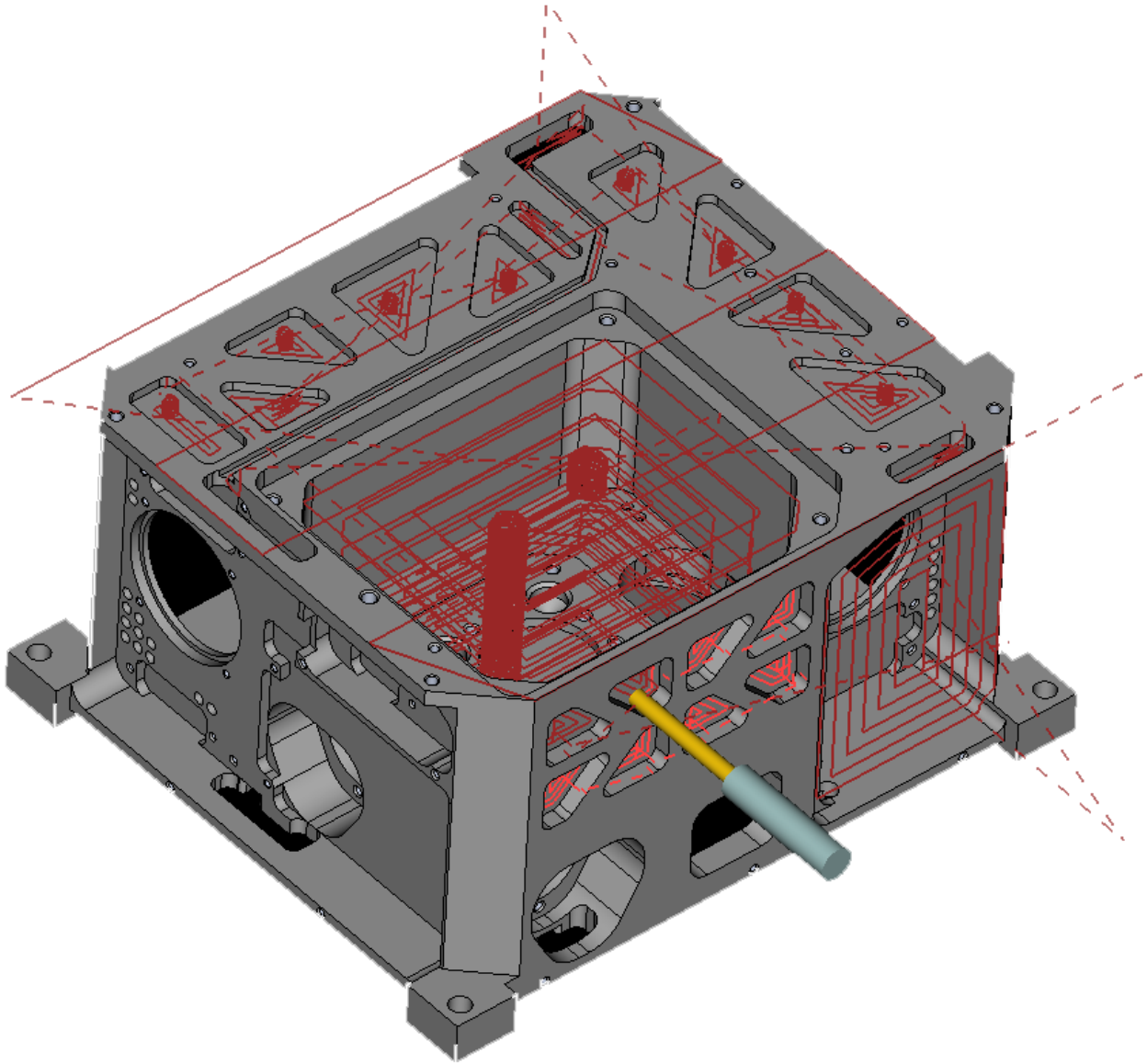

T-FLEX CAM

Machining Processes

3D machining

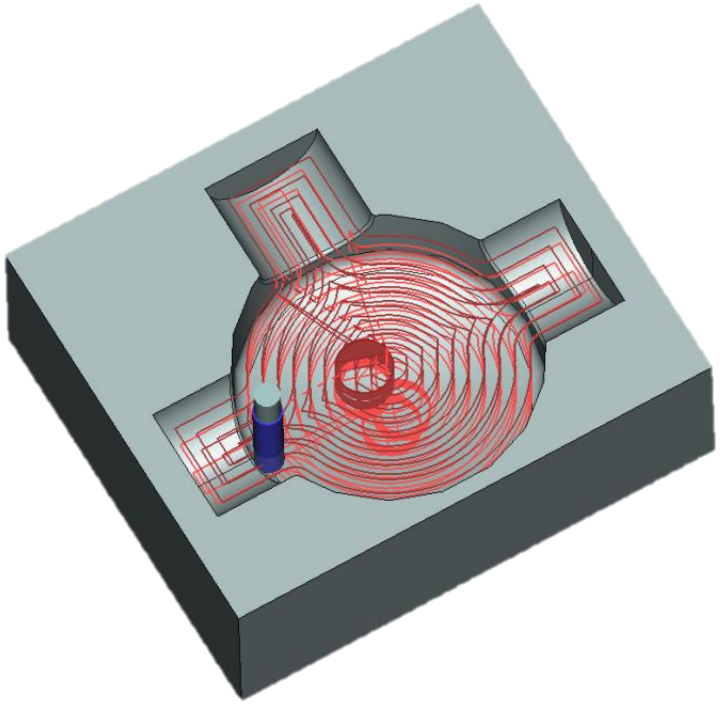

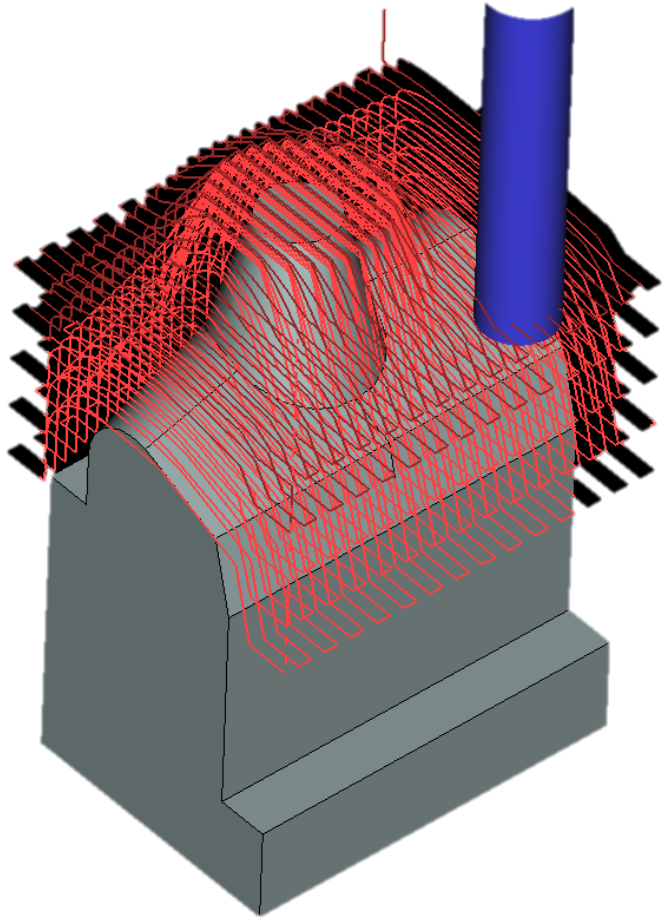

Machining by zigzag,
loop and spiral.

T-FLEX CAM

Machining Processes

3D machining

Processing by spiral, zigzag, and their combination in a single toolpath.

Possibility to set the required height of the scallop surface after treatment.

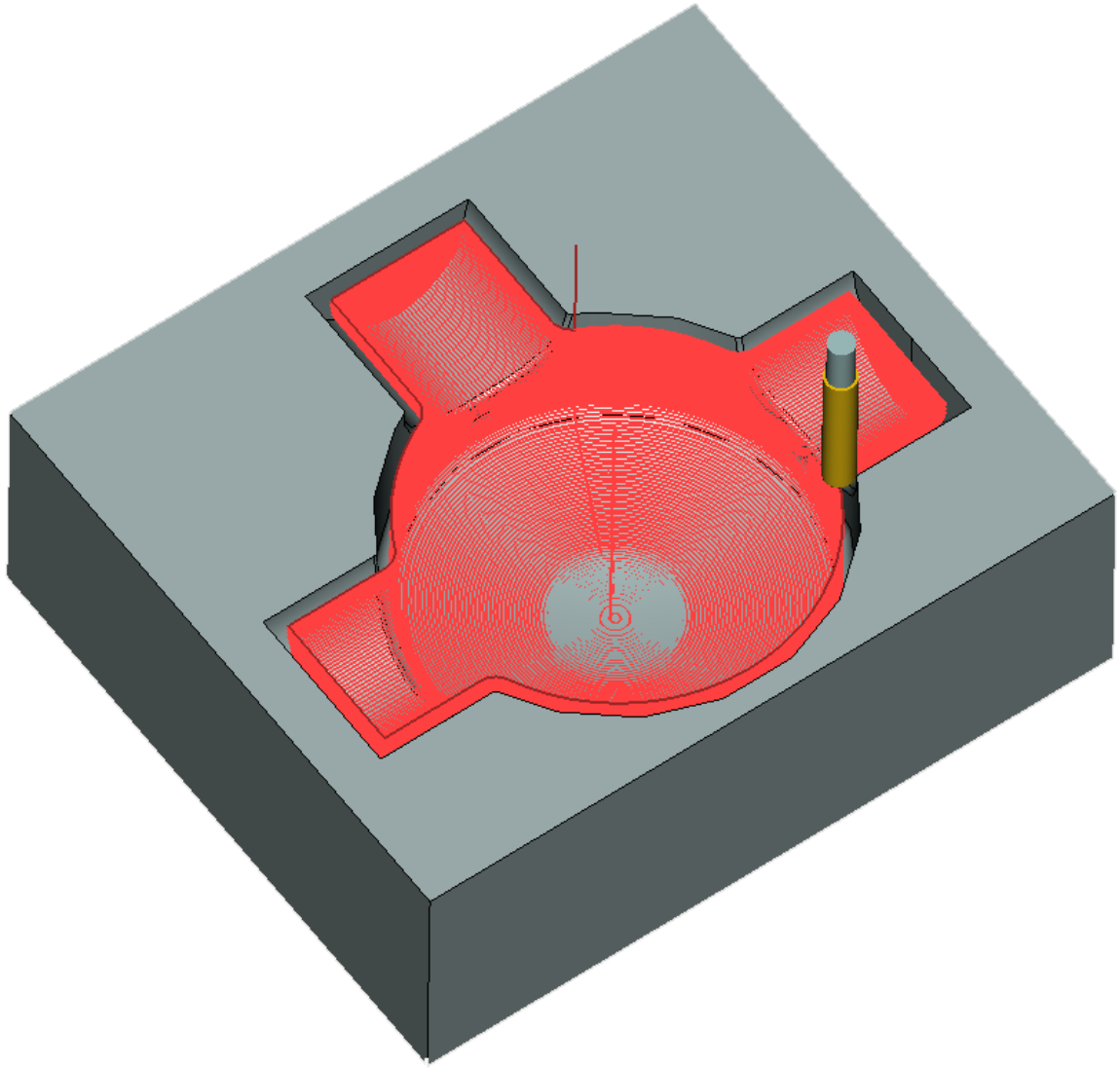

T-FLEX CAM

Machining Processes

4D milling

Possibility to machine parts placing the tool perpendicular to a cylindrical surface.

Example of milling a screw with variable pitch.

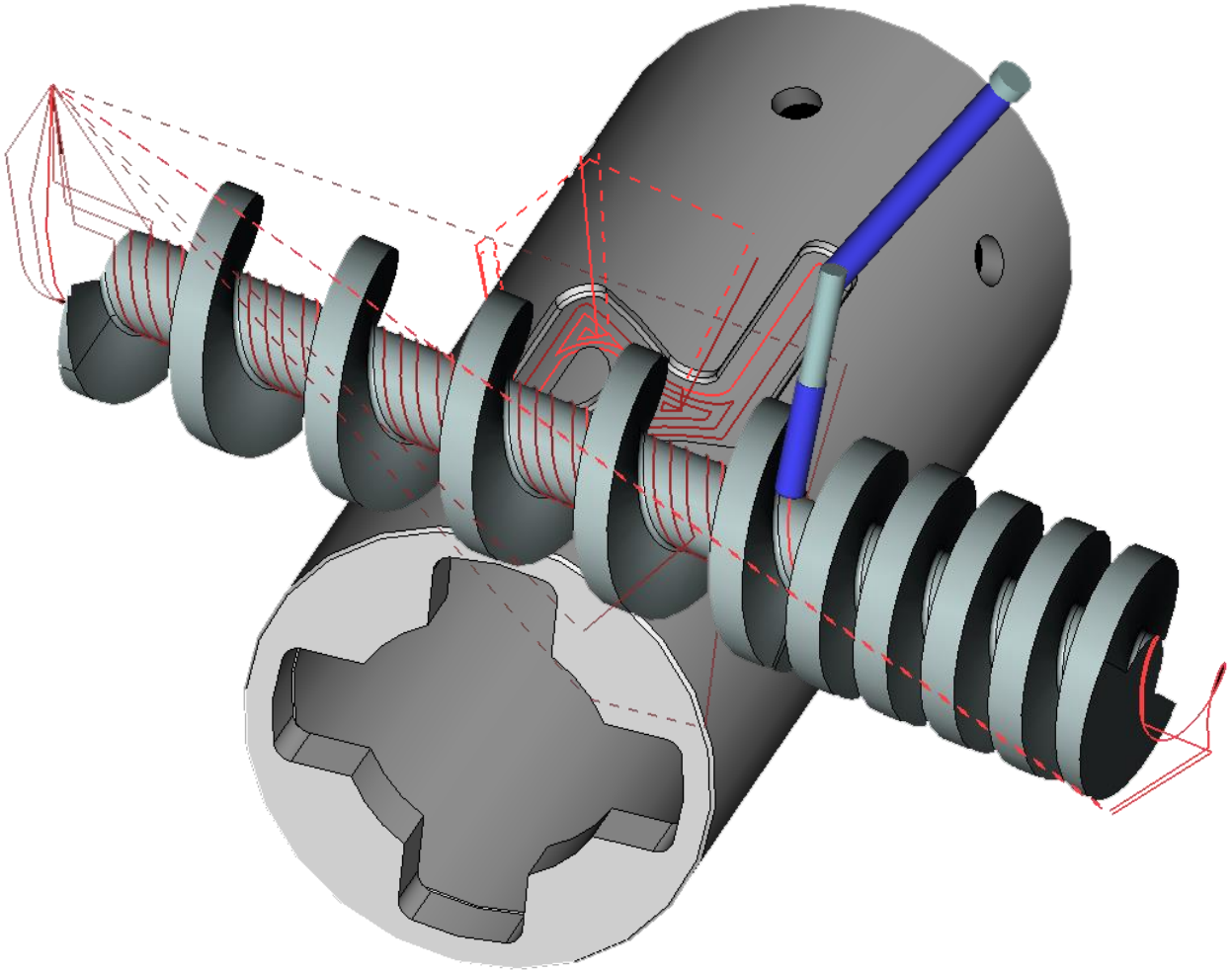

T-FLEX CAM

Machining Processes

Multi-axis engraving

This type is obtained by projecting towards direction of a 3D profile to a surface.

As a result, you can easily apply text to complex freeform surfaces.

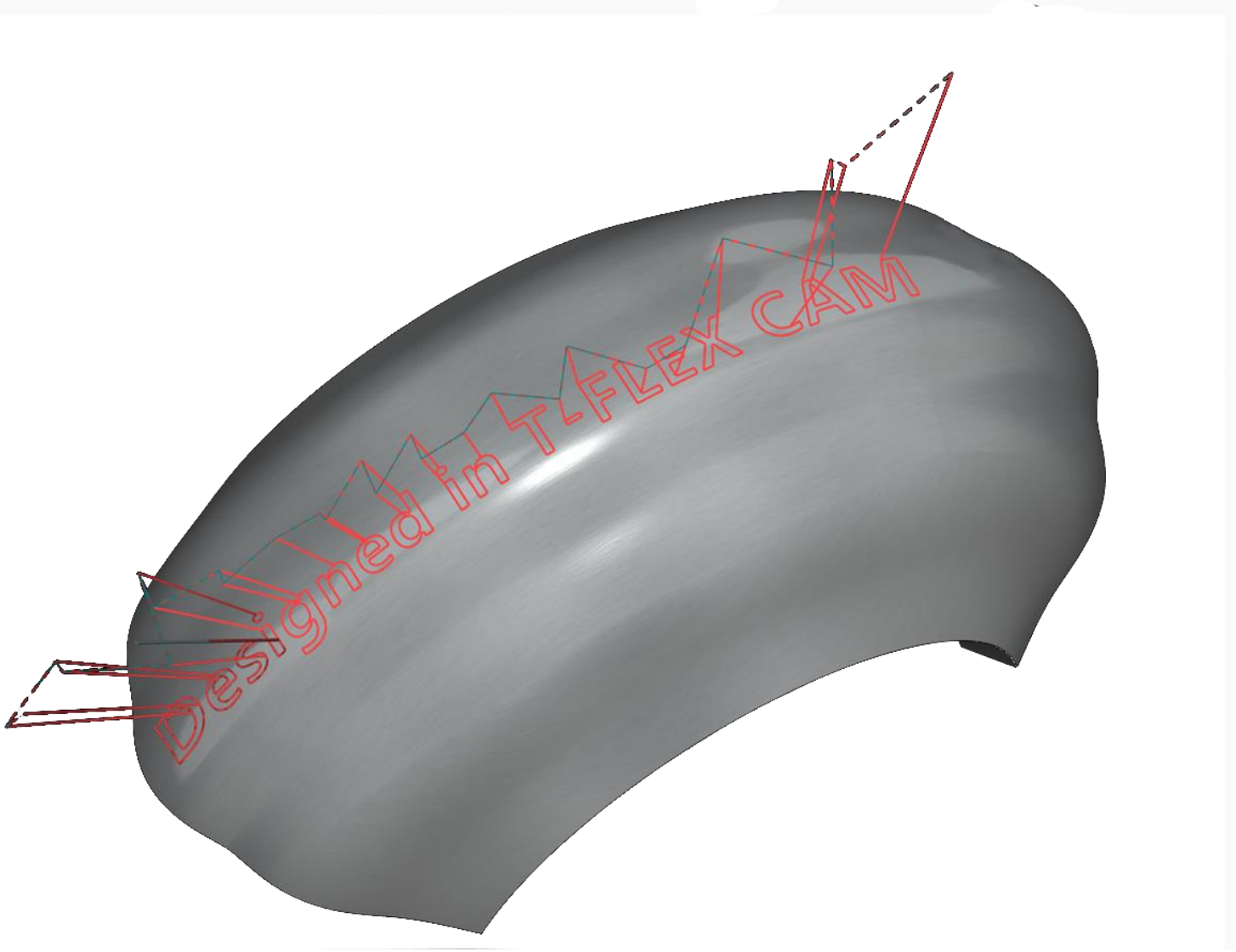

T-FLEX CAM

Machining Processes

5D continuous machining

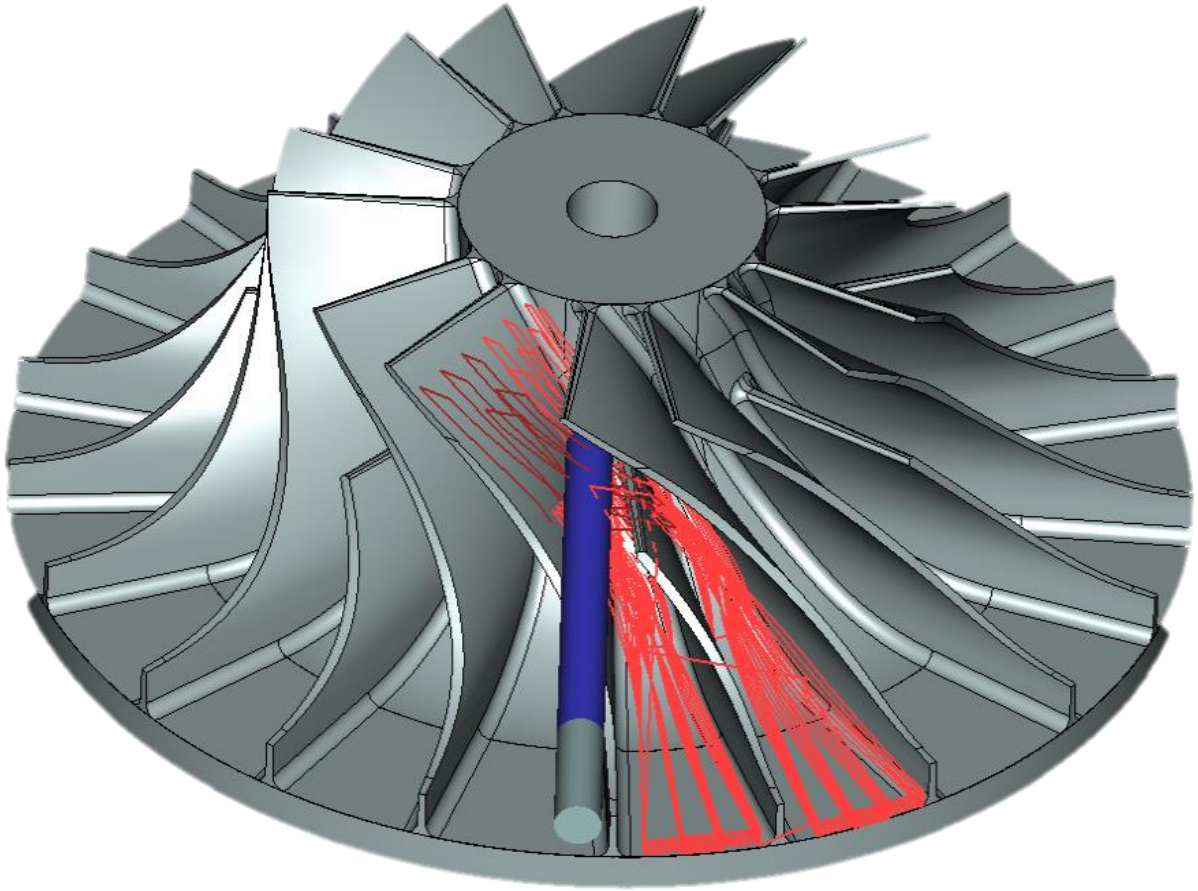

Roughing and finishing of turbine blades and mono wheels.

T-FLEX CAM

Machining Processes

5D continuous machining

Possibility to separately control the tool inclination angles depending on the treated section.

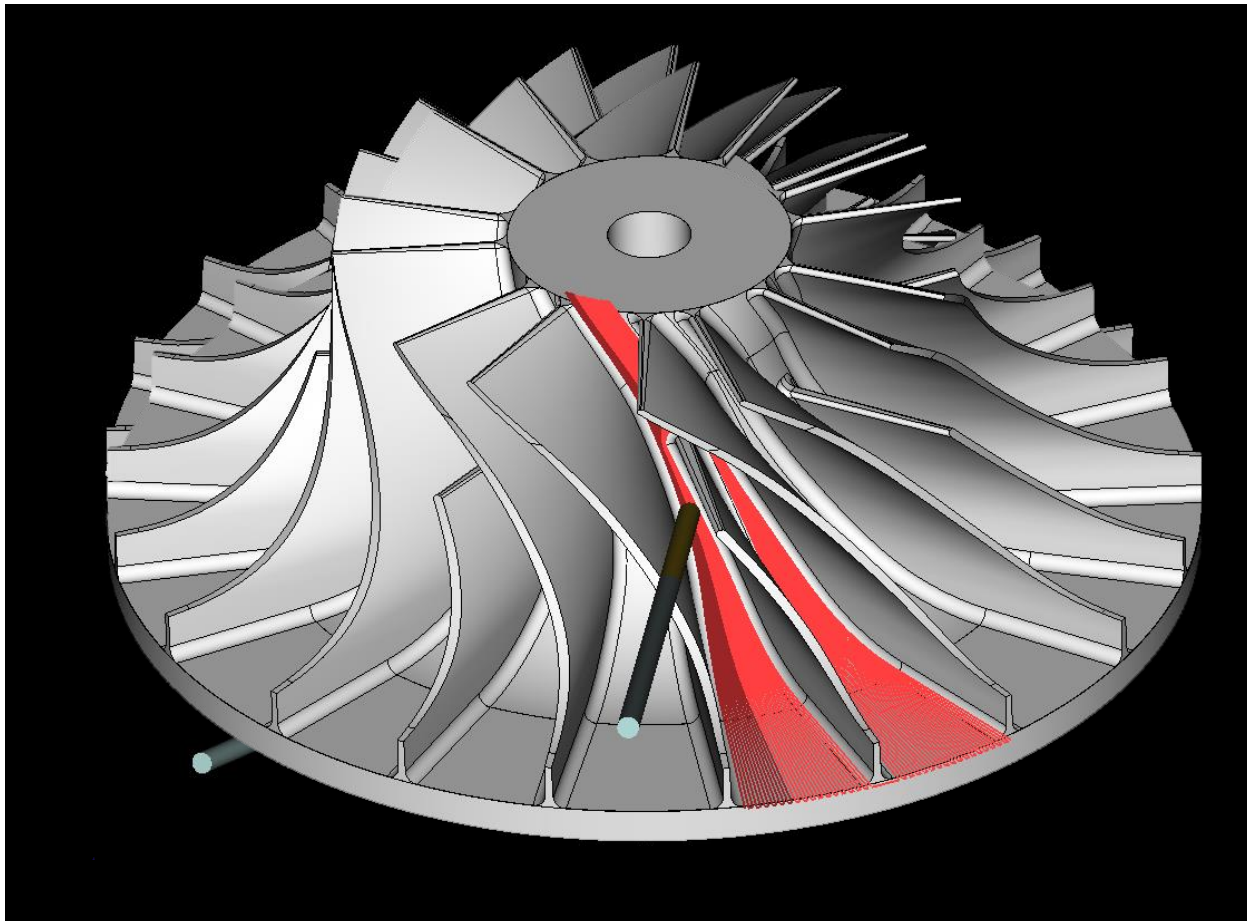

T-FLEX CAM

Machining Processes

5D machining

The mill has two angles:

- ✓ The first (small) angle provides smooth transition from the thick part of the mill to the thin part.
- ✓ The second provides the desired tilt and length of the cutting face, which determines the machining accuracy.

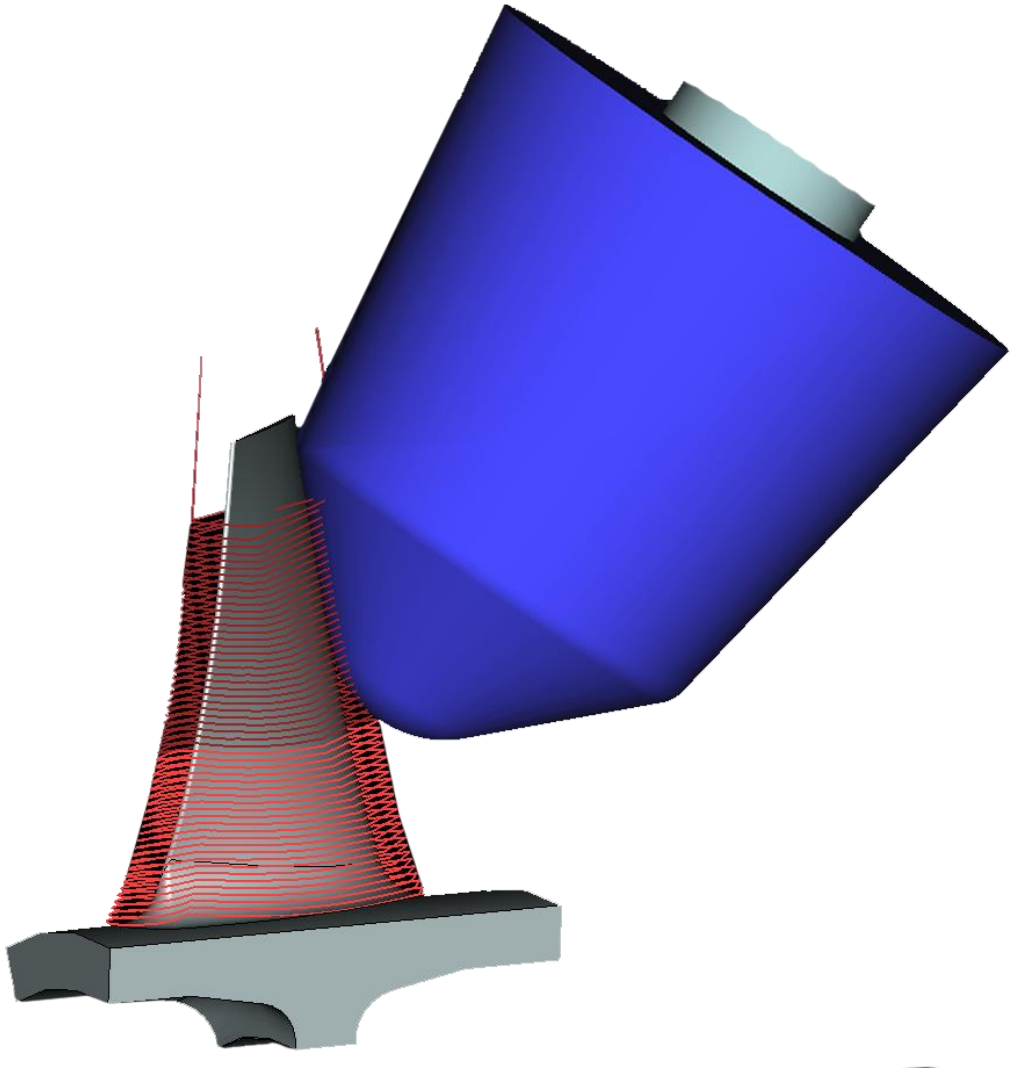

T-FLEX CAM

Machining Processes

Combined turning and milling

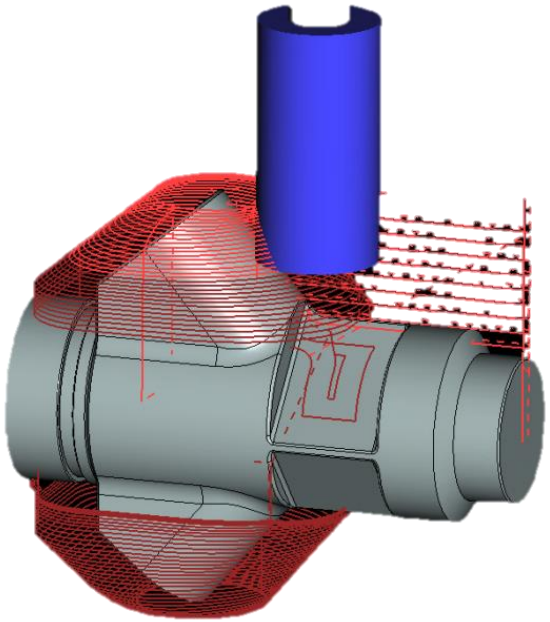

Example of combination of turning and milling on multi-axis turning center.

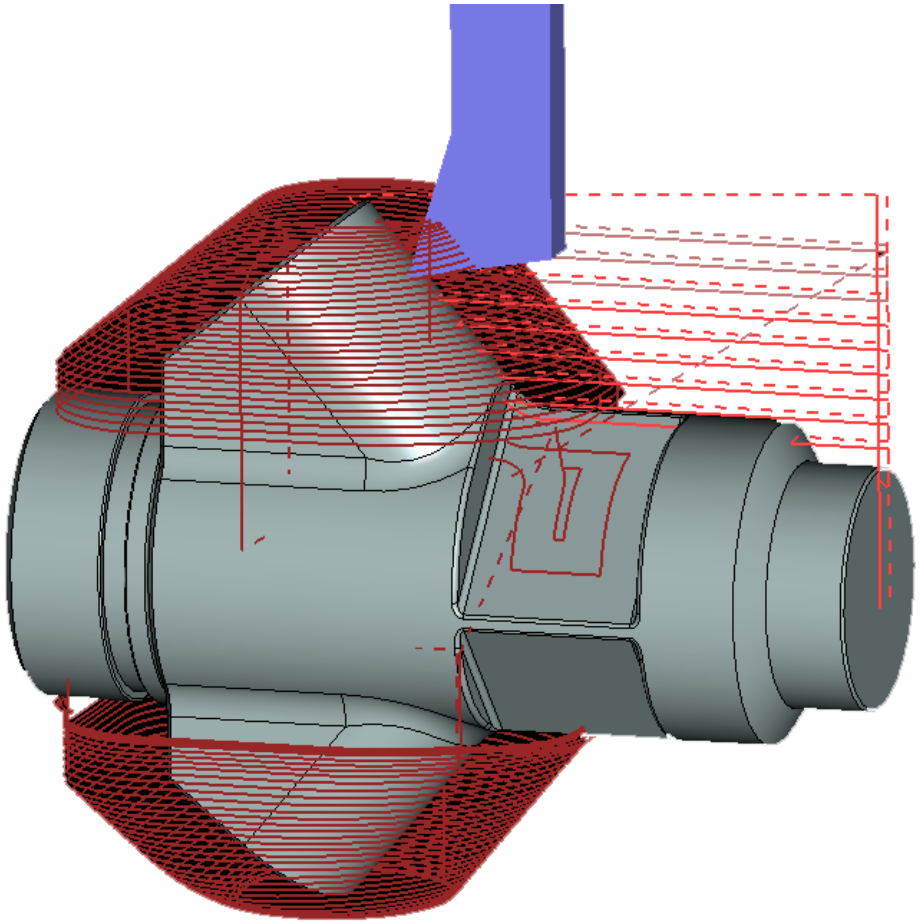

T-FLEX CAM

Machining Processes

Machining simulation with material removal

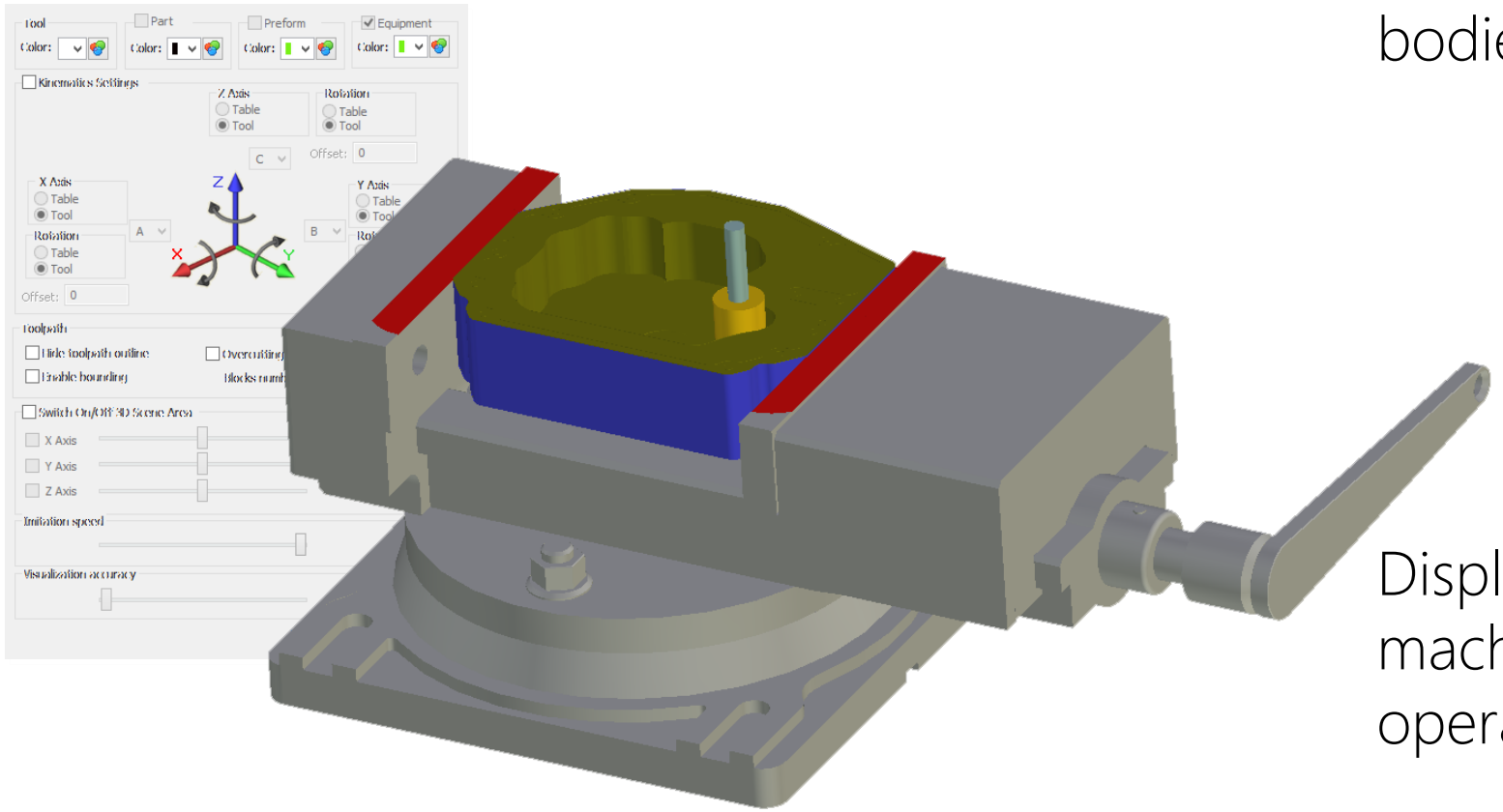

Predicts part overcutting and collision of the cutting tool with fixtures and working bodies of the machine.

Displays form of the real machined part for the current operation.

T-FLEX CAM

Machining Processes

Verification of the machining results

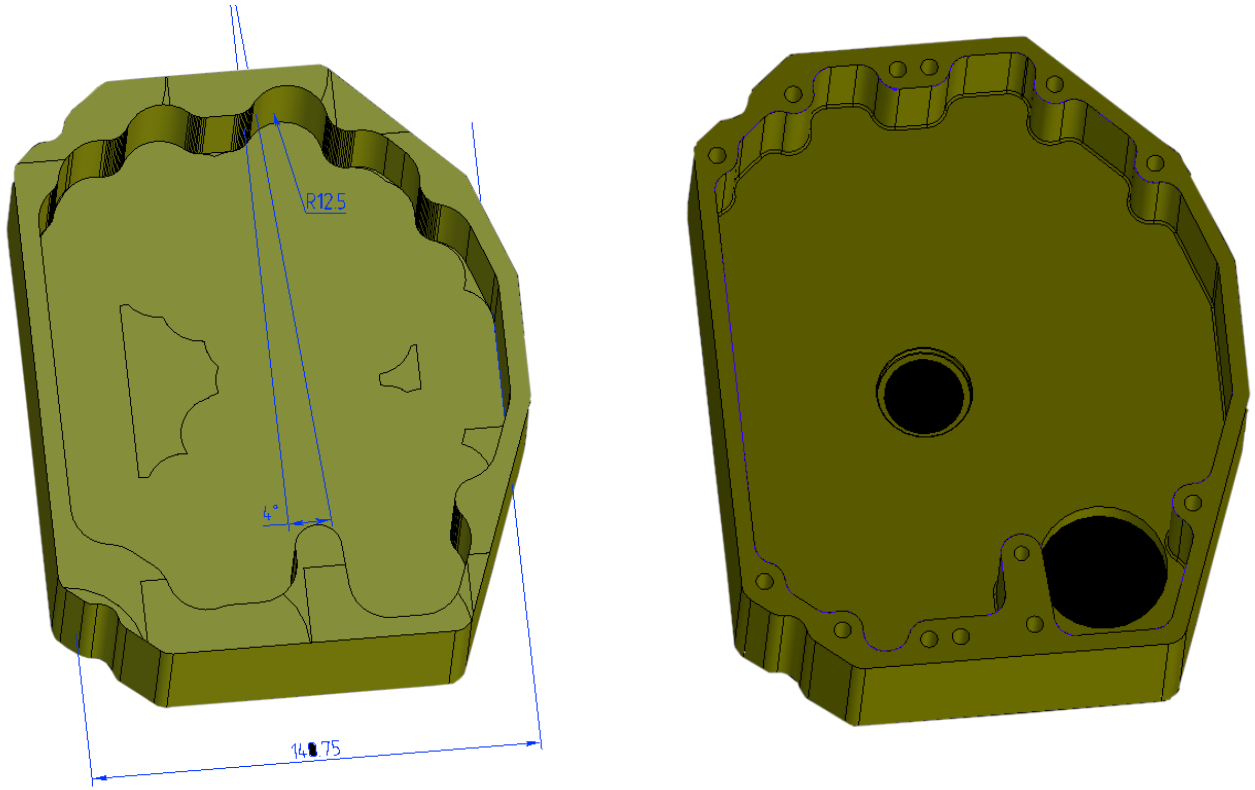

Quantitative and qualitative evaluation and comparison of results with the original model.

Possibility to use the machining result as a workpiece for subsequent operations.

T-FLEX CAM

Integration with PLM systems

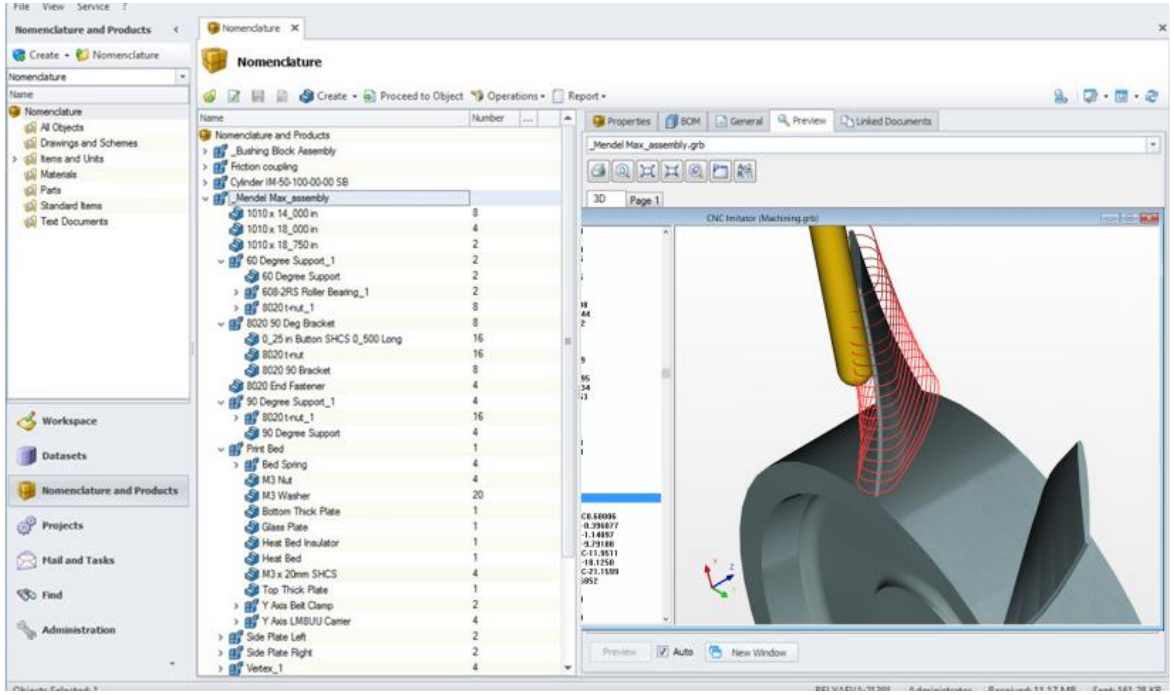

- T-FLEX CAM can transfer results to PLM applications:
- T-FLEX CAM can transfer results to PLM applications:

✓ model of part;
✓ model of workpiece;
✓ set of tools with geometry and cutting modes;
✓ postprocessor for a particular machine.

T·FLEX CAM

Tool Design

Tool Editor

- T-FLEX CAM provides functionality for tool design as well as option for reading tool parameters from PLM applications.

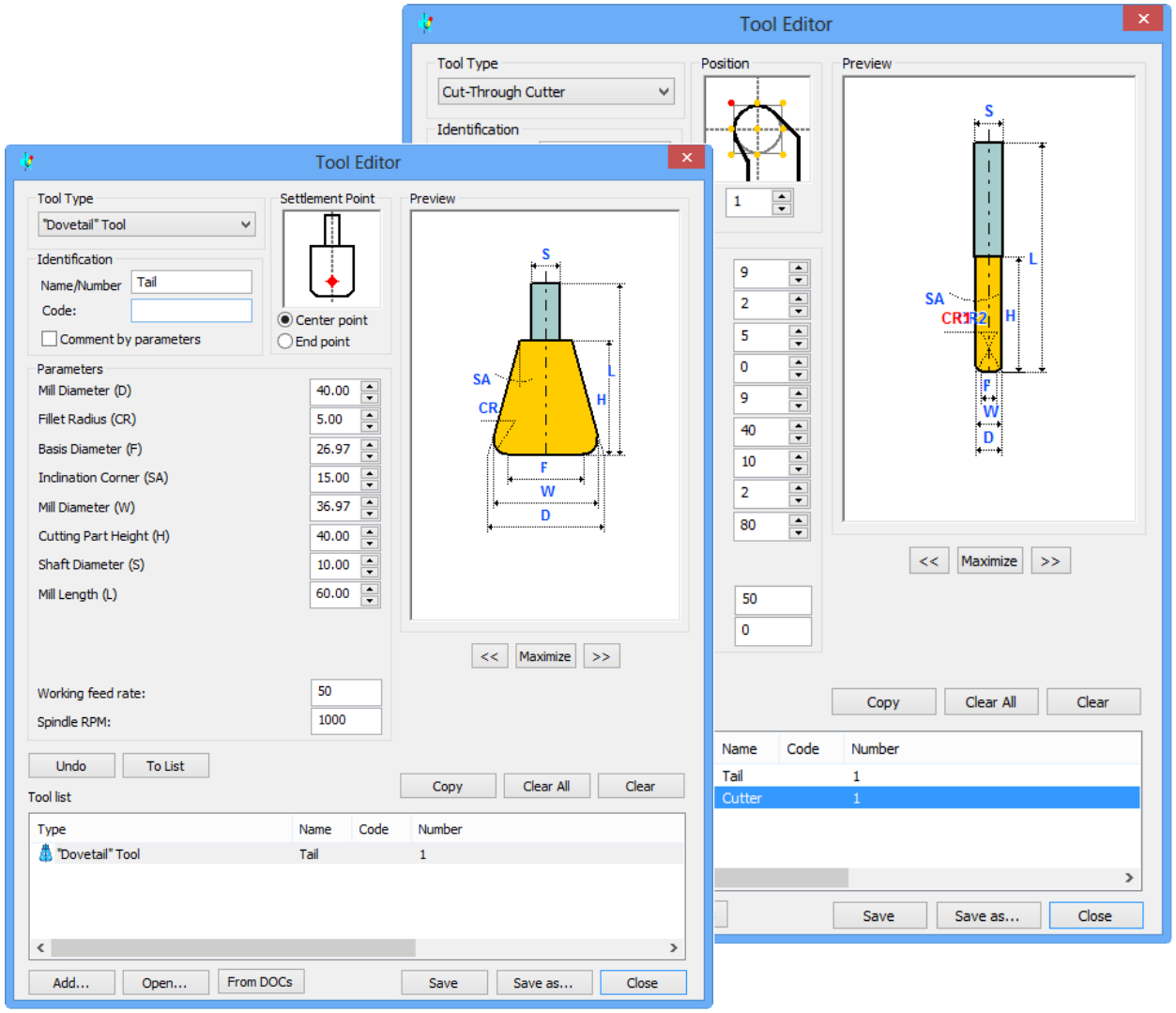

Postprocessing

Postprocessing Capabilities

- ✓ Substantial built-in library of postprocessors for all types of machines.
- ✓ Postprocessor generator to create and modify table postprocessors to meet the requirements of your equipment.
- ✓ Possibility to develop a special postprocessor using direct programming on the base of existing templates provided in source codes.

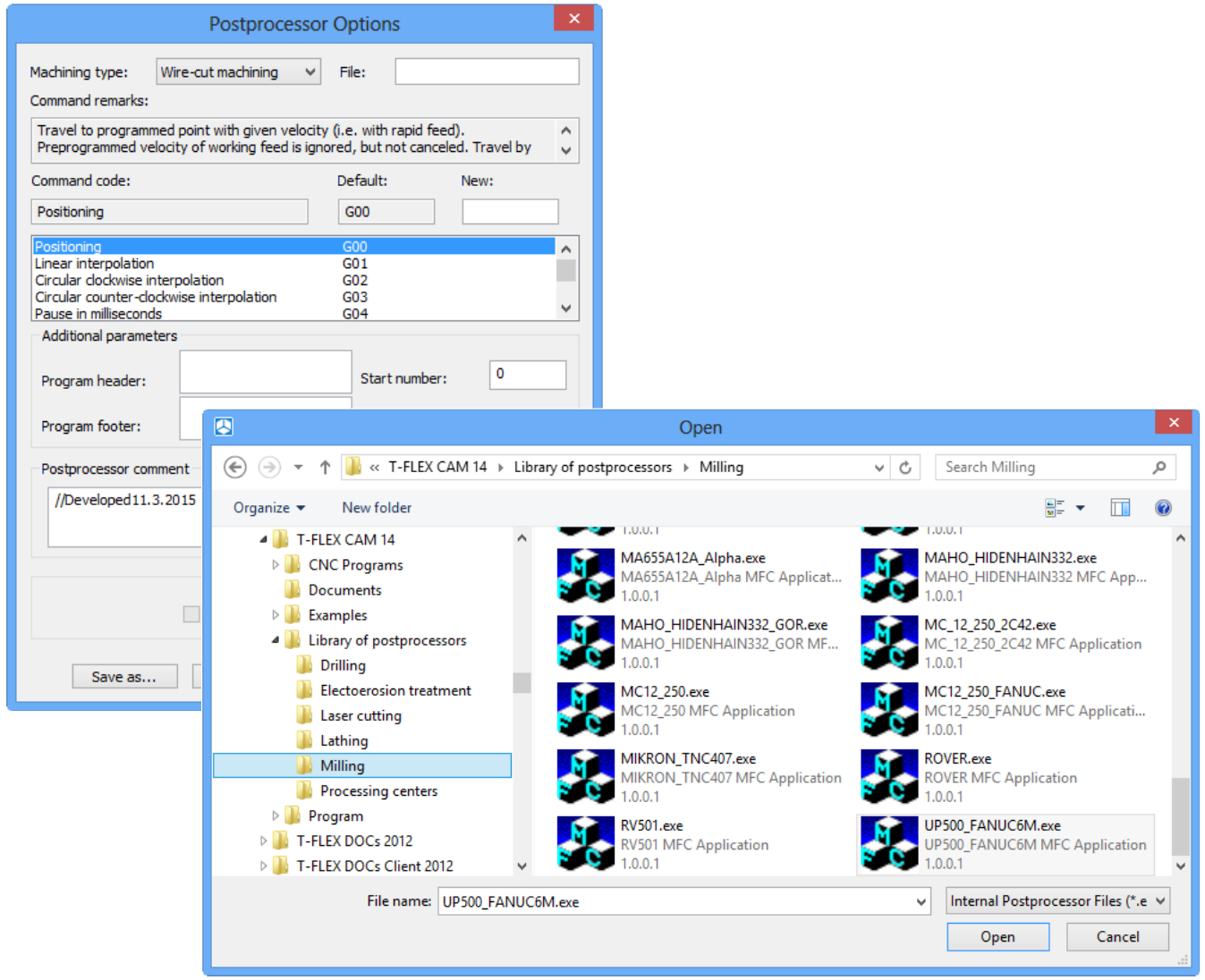

T-FLEX CAM

Examples of Machined Parts

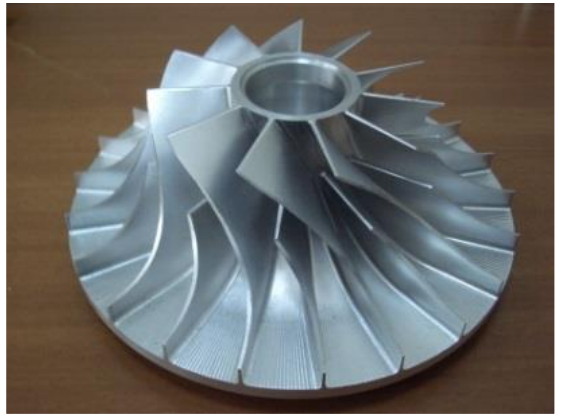
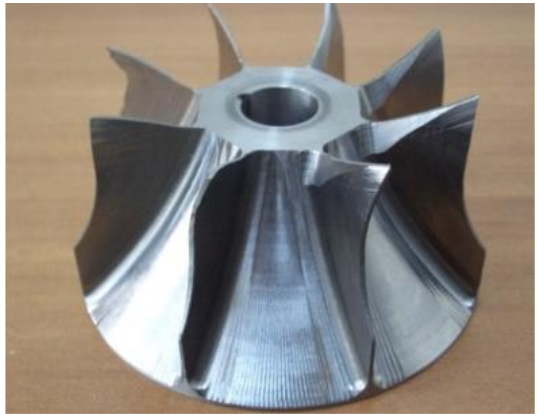

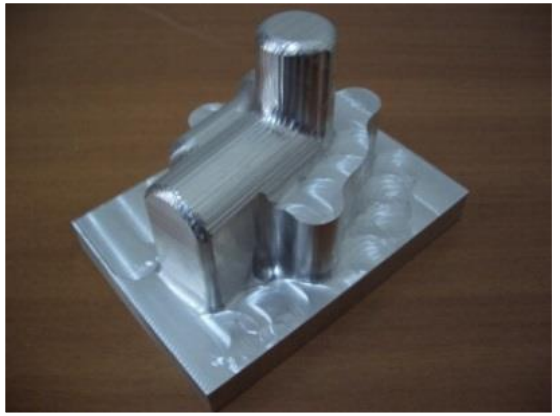

T-FLEX CAM

For more information about T-FLEX CAD and other Top Systems' products you may contact directly our company or any regional representative

www.tflex.com | tflex@topsystems.ru

CONTACT US

TOP SYSTEMS